Effects of Free-Stream Turbulence on Diffuser Performance[1]

J. A. Hoffmann
Professor,
Aeronautical and Mechanical Engineering Department,
California Polytechnic State University,
San Luis Obispo, Calif. 93407
Mem. ASME

An experimental evaluation of the effects of free-stream turbulence on the performance of a subsonic two-dimensional diffuser has been made. Increases of the diffuser's static pressure recovery coefficient of 11.3 and 23.9 percent at total included divergence angles of 12 and 20 degrees respectively were obtained when the value of the inlet integral free-stream scale of turbulence in the flow direction was at least 7.2 times larger than the inlet boundary layer displacement thickness, when the inlet total free-stream turbulence intensity was at least 3.5 percent, and when the axes of upstream rods used to generate turbulence were perpendicular to the flow and parallel to the diverging walls of the diffuser. It is hypothesized that a larger scale of turbulence with the specified eddy axis orientation transmits the free-stream energy to the walls more effectively and, when coupled with large turbulence intensities, are mechanisms which act to decrease the distortion and delay separation within the diffuser.

Introduction

A diffuser, one of the basic components of systems utilizing fluid flow, is a device in which the inlet dynamic pressure of a fluid is converted to a static pressure rise. For subsonic flow, this is done by decelerating the fluid by means of a gradual increase of the cross sectional flow area. An understanding of basic mechanisms which control diffuser performance will lead to the design of systems which employ techniques to utilize these mechanisms in improving the efficiency of fluid machines.

The literature contains many studies of diffuser performance such as those presented by Cockrell [1], McDonald [2], Sovran [3], and Fox and Kline [4]. When Moore and Kline [5] placed one rod ($D/W_1 = 1.25$) at the lip of a diffuser entrance with $2\Theta = 45$ deg, the existing stall was eliminated, and the pressure recovery coefficient increased from 0.3 to 0.575. Also, Waitman [6] placed a rod upstream of a diffuser and obtained a 21.5 percent increase in the peak pressure recovery of the diffuser and a 38 percent increase in the pressure recovery at $2\Theta = 20$ deg. More recently, Sajben [7] eliminated separation and increased the pressure recovery of a conical diffuser as much as 16 percent by mounting a cylinder near the entrance to the diffuser.

Vortex generators, normally used in flows with adverse pressure gradients, such as in diffusers and on airfoils, mix high energy air from outside the boundary layer, thereby delaying separation. The trailing vortex of the generators is the mixing mechanism. Vortex generator designs used to delay separation are described by Lachmann [8], Brown [9], Woolard [10], Taylor [11], Gadetskiy [12], and Senoo and Nishi [13].

In this investigation, experimentally determined free-stream turbulence parameters measured at the diffuser inlet will be correlated with diffuser performance in an attempt to obtain an understanding of basic mechanisms which improve diffuser performance.

Experimental Apparatus and Procedure

Experimental Apparatus. The experimental system used for the investigation is described by Hoffmann [14]. Air is drawn through the straight channel and two-dimensional straight-walled diffuser shown in Fig. 1. The channel width dimension, W_1, is 1.024 in. (2.60 cm). The channel height/inlet width ratio (b/W_1) is 5.86, the channel length/inlet width ratio (c/W_1) is 4.88, and the wall length ratio of the diffuser (L/W_1) is 14.7.

Equally spaced rods used for turbulence generation were placed between a baseplate and topplate upstream of the throat as illustrated in Fig. 2. The rod length/channel height ratio (b_o/b) was 1.71. Geometrical information about all upstream rod sets is presented in Table 1. The axes of the rods in rod sets GH, JH, and KH are parallel to the y axis, while the axes of all other rod sets are parallel to the z axis.

Velocity and turbulence measurements were obtained using constant temperature hot wire anemometers and associated instrumentation described by Hoffmann [14]. Inclined manometers were used for all pressure measurements.

Procedure. All data were taken with an inlet Reynolds number of 7.83×10^4; hot wire measurements were obtained at the diffuser inlet (section 1) with the diffuser walls removed and with the probe body aligned parallel to the flow.

Values of boundary layer displacement thickness (δ^*), momentum thickness (δ^{**}), and the shape factor (H), along with turbulence intensity profiles, were obtained using a single

[1] Prepared under NASA-ARC Grant #NSG-2391.
Contributed by the Fluids Engineering Division and presented at the Joint Applied Mechanics, Fluids Engineering, and Bioengineering Conference, Boulder, Colo., June 22-24, 1981, of THE AMERICAN SOCIETY OF MECHANICAL ENGINEERS. Manuscript received by the Fluids Engineering Division, June 27, 1980. Paper No. 81-FE-4.

Downloaded From: https://fluidsengineering.asmedigitalcollection.asme.org on 12/19/2018 Terms of Use: http://www.asme.org/about-asme/terms-of-use
Copyright © 1981 by ASME

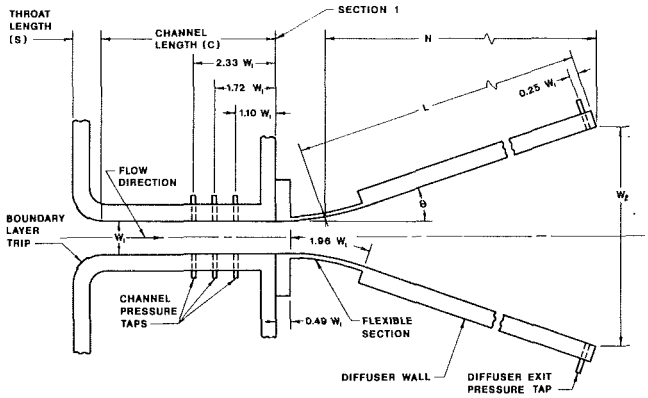

Fig. 1 Inlet, channel, and diffuser

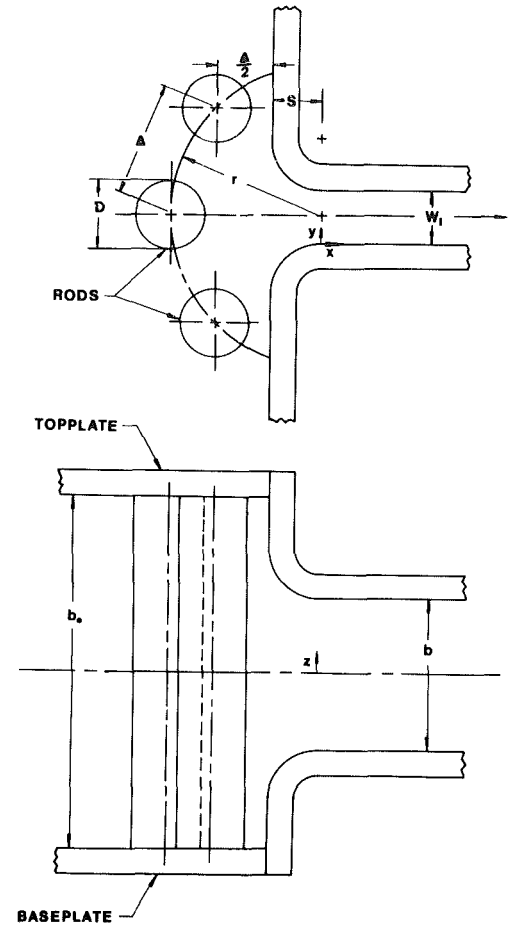

Fig. 2 Rod set geometry nomenclature

hot wire mounted in a micrometer traversing device. Free-stream turbulence intensities in the y and z directions were determined using both an X-wire probe and probes with single wires placed perpendicular and inclined 45 deg to the mean flow direction. Free-stream longitudinal correlation coefficients and spectral density measurements were obtained using a single hot wire placed normal to the flow. Values of the longitudinal integral scale of turbulence (λ_x) were obtained by integration of the area under curves of the longitudinal correlation coefficient (R_x) versus a distance corresponding to the time delay of the hot wire signal (Taylor's hypothesis [15]).

The pressure rise across the diffuser was determined by taking the difference between the pressure from taps at the diffuser exit and the pressure at the exit of the channel (section 1), obtained by extrapolating the static pressures measured in the inlet channel using a power law relationship for boundary layer growth ($\delta^* \sim x^{0.8}$) (16). The correction associated with this extrapolation increased C_p by a maximum of 1.4 percent. A pressure loss coefficient across the rods (C_o) was experimentally obtained for each rod set and was found to have a maximum value of 2.2 percent. This pressure loss, along with a pressure differential between the pressure from taps located in the topplate and baseplate upstream of the rods and the extrapolated pressure at section 1, was used to determine the free-stream channel velocity and corresponding value of inlet mass average velocity.

Nomenclature

AR = diffuser area ratio, W_2/W_1
b = distance between parallel walls of diffuser
b_o = rod length
c = channel length
C_p = static pressure recovery coefficient, $(P_2-P_1)/\rho\overline{U^2}/2$
C_o = pressure loss coefficient across rods, $\Delta P_o/\rho\overline{U^2}/2$
D = rod diameter
H = shape factor, δ^*/δ^{**}
L = diffuser wall length
n = number of rods
N = diffuser axial length
P = static pressure
$\sqrt{q'^2}$ = total RMS turbulence quantity, $\sqrt{(\overline{u'^2}+\overline{v'^2}+\overline{w'^2})/3}$
r = radius of rod set geometry
R_e = Reynolds number, $\bar{U}W_1/\nu$
R_x = free-stream autocorreleation coefficient in flow direction at diffuser inlet, $\overline{u'(x)u'(x-\Delta x)}/\overline{u'^2}$
S = throat section dimension (see Fig. 1)
$\bar{u}$ = average velocity in flow direction at diffuser inlet
u' = turbulence component in flow direction at diffuser inlet
$\bar{U}$ = mass average velocity at diffuser inlet
U_m = average free-stream velocity in flow direction at diffuser inlet
v' = turbulence component in y direction at diffuser inlet
W = diffuser width measured between diverging walls
w' = turbulence component in z direction at diffuser inlet
δ = boundary layer thickness at diffuser inlet
δ^* = boundary layer displacement thickness at diffuser inlet
δ^{**} = boundary layer momentum thickness at diffuser inlet
Θ = divergence angle of diffuser wall
ν = kinematic viscosity
λ_x = free-stream integral scale of turbulence at diffuser inlet in x direction, $\int_0^\infty R_x dx$
ρ = fluid density

Subscripts
0 = location of rods
1 = diffuser inlet ($0.49W_1$ upstream from beginning of diffuser wall curvature)
2 = diffuser exit
x = flow direction
y = direction normal to the flow and parallel to the parallel walls of the diffuser
z = direction normal to the flow and perpendicular to the parallel walls of the diffuser

Downloaded From: https://fluidsengineering.asmedigitalcollection.asme.org on 12/19/2018 Terms of Use: http://www.asme.org/about-asme/terms-of-use

Table 1

Rod Set	D/W_1	r/W_1	n	$C_p(2\theta = 12^o)$	$C_p(2\theta = 20^o)$	$\sqrt{\overline{u'^2}}/U_m(\%)$	$\sqrt{\overline{v'^2}}/U_m(\%)$	$\lambda x/\delta^*$
None	-	-	0	0.705	0.577	0.57	0.57	-
A	0.18	2.93	19	0.713	0.583	1.75	3.02	4.28
B	0.18	4.39	35	0.709	0.594	1.31	2.89	6.10
C	0.37	2.93	11	0.751	0.658	2.03	4.05	4.35
D	0.37	3.90	11	0.736	0.631	1.58	3.60	6.95
E	1.28	2.93	3	0.765	0.674	3.07	5.49	6.38
F	1.28	4.39	5	0.798	0.703	2.10	4.46	7.53
G	1.28	5.85	7	0.782	0.687	1.28	3.83	8.37
GH	1.28	5.85	7	0.737	0.635	2.53	6.05	9.07
H	1.28	5.51	7	0.773	0.679	1.53	3.89	7.92
I	4.39	8.78	3	0.756	0.616	0.80	2.87	10.55
J	4.39	7.80	3	0.778	0.682	1.14	3.43	11.61
JH	4.39	7.80	3	0.754	0.686	2.76	7.53	9.71
K	4.39	9.76	5	0.793	0.713	2.05	6.32	9.17
KH	4.39	9.76	5	0.773	0.699	2.99	8.91	10.26
L	4.39	6.83	3	0.792	0.702	2.14	5.87	10.27
M	1.83	3.73	3	0.785	0.717	3.02	6.42	7.21
N	2.99	7.32	5	0.788	0.715	1.76	4.51	10.94

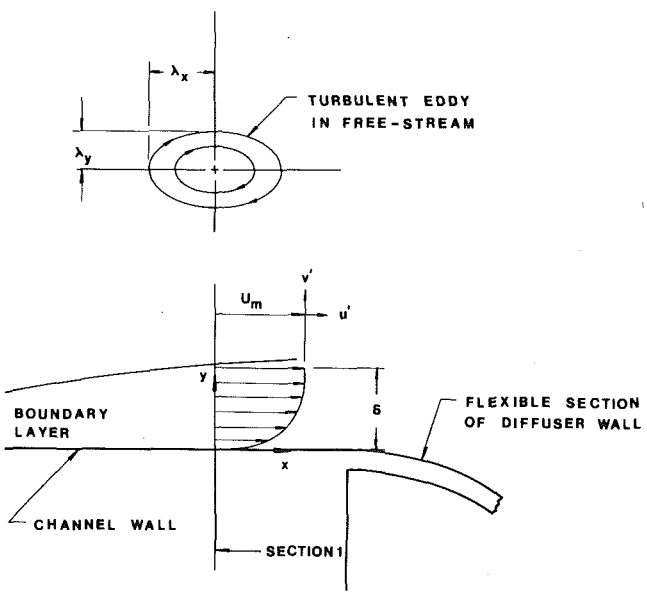

Fig. 3 Two-dimensional schematic of flow characteristics at diffuser inlet

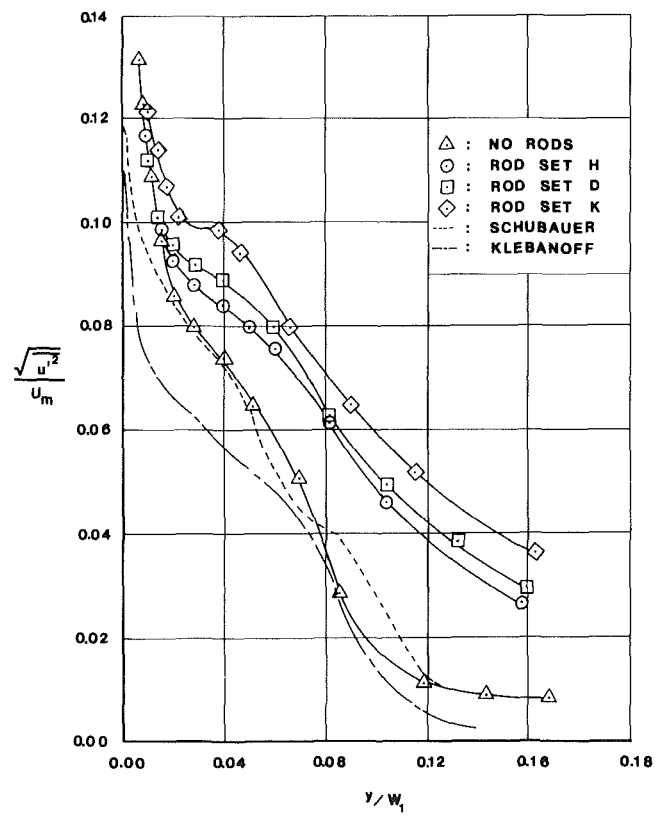

Fig. 4 Inlet boundary layer longitudinal turbulence profiles

Results and Discussion

Inlet flow characteristics, pressure recovery measurements, and correlations between the pressure recovery and inlet free-stream turbulence parameters are discussed below. A representation of the flow characteristics at the diffuser inlet is presented in Fig. 3.

Inlet Velocity and Longitudinal Turbulence Profiles. The average dimensionless inlet blockage parameter, $2\delta^*/W_1$, obtained from the velocity profiles was 0.040 for all rod sets except rod sets GH, JH and KH, for which it was 0.034. The average shape factor (H) obtained for all rod sets was 1.56, a reasonable value for a turbulent boundary layer in the final stage of transition. Small changes in the velocity profile of a turbulent boundary layer when free-stream longitudinal turbulence intensities were varied to 4 percent were also observed by Kline [17]. The estimated uncertainties in $2\delta^*/W_1$ and H, obtained using the method of Kline and

Downloaded From: https://fluidsengineering.asmedigitalcollection.asme.org on 12/19/2018 Terms of Use: http://www.asme.org/about-asme/terms-of-use

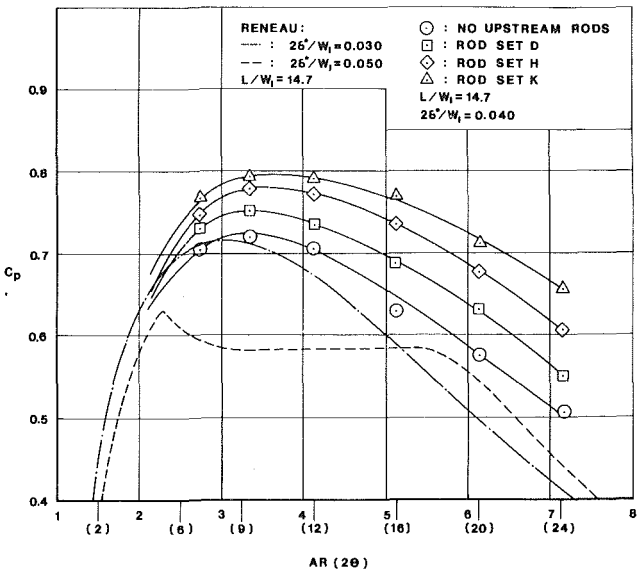

Fig. 5 Comparison of static pressure recovery coefficient versus area ratio curves

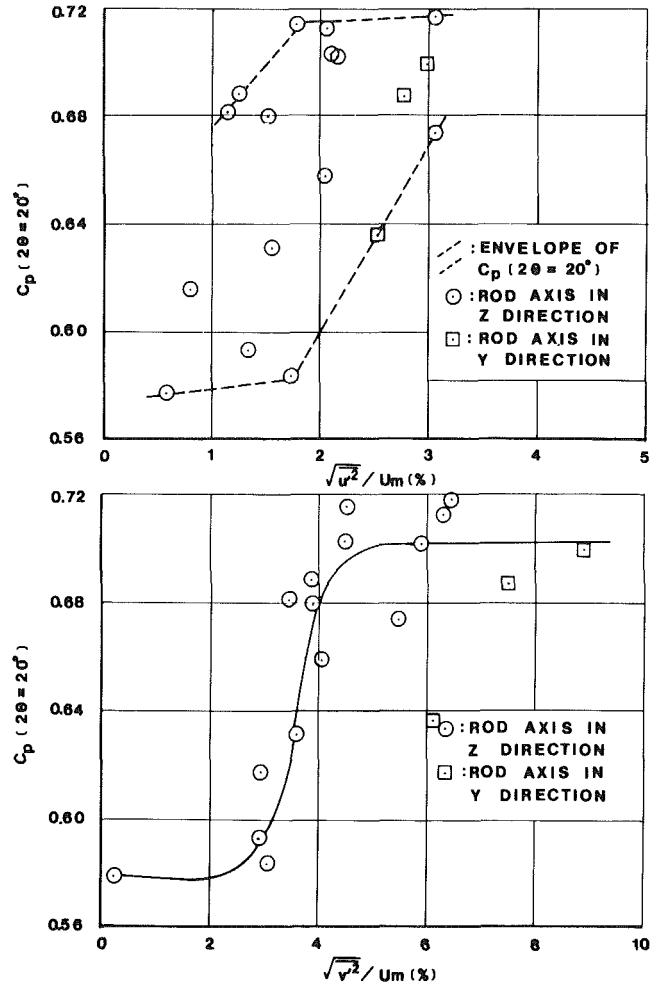

Fig. 6 Static pressure recovery coefficient versus inlet free-stream longitudinal turbulence intensity and inlet free-stream turbulence intensity in y direction

McClintock [18] with 20:1 odds, were ±5 percent for the no rod case and rod sets A through D, and were ±10 percent for rod sets E through N.

Longitudinal turbulence intensity profiles within the boundary layer are presented in Fig. 4. The results, which agree with those of Ahmad [19], indicate that the free-stream turbulence significantly affects the turbulent structure of the boundary layer. Turbulence intensity profiles obtained by Klebanoff [20] and Schubauer [21] for low free-stream turbulence levels demonstrate a reasonably good agreement with the results of this study for the case of no upstream rods.

All velocity profiles exhibit a uniform core velocity in the center 75 percent of the channel. The region of uniform turbulence intensities varied from the center 70 percent of the channel for the no rod condition, to the center 30 percent of the channel for rod sets with $D/W_1 = 4.39$.

Free-Stream Turbulence Parameters. Values of the turbulence intensity in the flow direction ($\sqrt{\overline{u'^2}}/U_m$) and in the y direction ($\sqrt{\overline{v'^2}}/U_m$) for all rod sets are presented in Table 1. The estimated uncertainties in the measurements are ±5 percent for rod sets A through H and ±10 percent for the no rod case and rod sets I through N. The free-stream turbulence intensities obtained using the single wire method agree well with those obtained using the X-wire. The average value of $\sqrt{\overline{w'^2}}/\sqrt{\overline{v'^2}}$ was 0.80 for all rod sets. The estimated uncertainties in the total turbulence intensity ($\sqrt{\overline{q'^2}}/U_m$) are ±7 percent for rod sets A through H and ±14 percent for the no rod case and rod sets I through N.

Spectral density and correlation coefficient curves for the longitudinal component of turbulence are presented by Hoffmann [14]. The spectral density curves show a broadband turbulence without peaks of power at any one frequency. Values of the dimensionless integral scale of turbulence (λ_x/δ^*) are presented in Table 1. The estimated uncertainty in this quantity varies from ±10 percent for rod sets A through D to ±15 percent for rod sets E through N.

Diffuser Performance. Data for C_p at $2\Theta = 12$ and 20 deg for all of the rod sets are presented in Table 1; the results have estimated uncertainties of ±5 percent. Typical C_p versus 2Θ curves are presented in Fig. 5. The results of Reneau [22] at a value of $2\delta^*/W_1 = 0.040$ (an average of Reneau's results at values of $2\delta^*/W_1 = 0.030$ and 0.050) compare favorably to those for the case of no upstream rods at $2\Theta \leq 4$ deg, but are as much as 11 percent lower in the region of peak pressure recovery. The agreement seems reasonable considering that the results presented by Reneau are correlations of measurements from a wide variety of data and that geometrical differences (e.g., the length of the flexible section of the diffuser's throat) may exist between various test systems. The results also indicate that increases in C_p of 23.6 percent at $2\Theta = 20$ deg and 12.5 percent at $2\Theta = 12$ deg are obtained for the K rod set as compared to the no rod case. The peak pressure recovery was increased 9.8 percent and the value of 2Θ corresponding to the peak value of C_p increased approximately 1.5 deg. Since all rod geometries produce essentially the same velocity profile at the diffuser inlet, the increase in C_p can be attributed to differences in inlet turbulence quantities.

Values of C_p at $2\Theta = 20$ deg are presented as a function of $\sqrt{\overline{u'^2}}/U_m$, $\sqrt{\overline{v'^2}}/U_m$, $\sqrt{\overline{q'^2}}/U_m$, and λ_x/δ^* in Figures 6 and 7. The values of C_p appear relatively insensitive to $\sqrt{\overline{u'^2}}/U_m$, and λ_x/δ^*. The results show that generally larger values of C_p are obtained as values of $\sqrt{\overline{v'^2}}/U_m$ and $\sqrt{\overline{q'^2}}/U_m$ are increased, but the trend is not consistent (e.g., rod sets E and GH produce relatively high turbulence intensities, but the corresponding values of C_p are lower than those obtained with some rod sets producing lower turbulence intensities). The results show that a threshold turbulence intensity in the y direction of about 3 percent or a total tur-

Downloaded From: https://fluidsengineering.asmedigitalcollection.asme.org on 12/19/2018 Terms of Use: http://www.asme.org/about-asme/terms-of-use

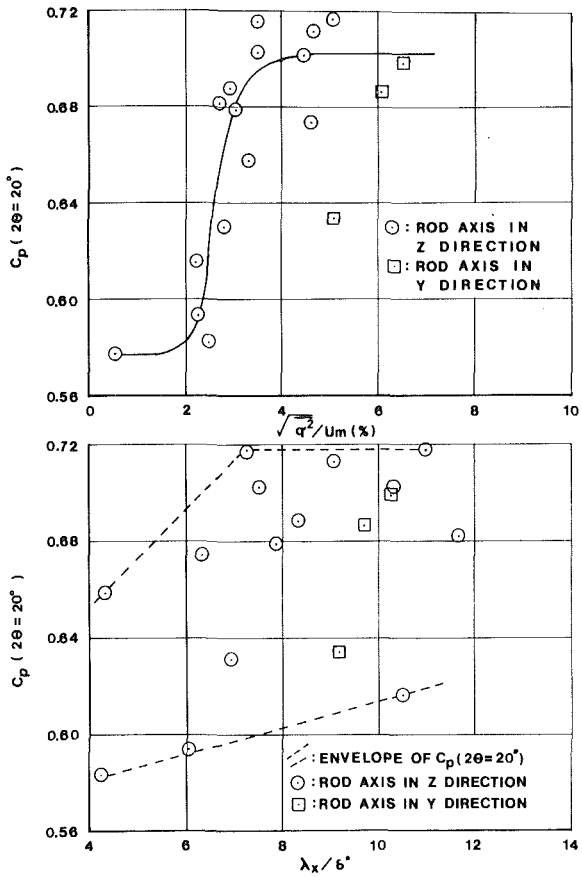

Fig. 7 Static pressure recovery coefficient versus inlet free-stream total turbulence intensity and dimensionless inlet free-stream integral scale of turbulence in flow direction

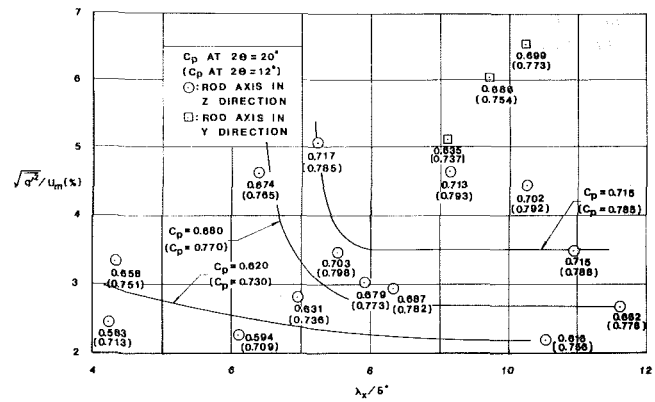

Fig. 8 Inlet free-stream total turbulence intensity versus inlet free-stream dimensionless integral scale of turbulence with static pressure recovery coefficient contours

bulence intensity of about 2 percent is required to obtain increases in C_p. All of the largest values of C_p (C_p ($2\Theta = 20$ deg) ≥ 0.699) were obtained with values of $\sqrt{v'^2}/U_m$ and $\sqrt{q'^2}/U_m$ equal to or larger than 4.46 and 3.47 percent respectively, and with values of $\lambda_x/\delta^* \geq 7.21$ (or with $\lambda_x \geq 1.2\delta$).

Figure 8 was constructed to examine a possible correlation between C_p, λ_x/δ^* and $\sqrt{q'^2}/U_m$. Values of $C_p(2\Theta = 20$ deg) are listed next to each data point along with, in parentheses, values of C_p ($2\Theta = 12$ deg). The implication of this figure is that a larger scale of turbulence more effectively transfers free-stream turbulent energy to the diffuser walls and, when coupled with larger values of total turbulence intensity, apparently results in a decrease of the distortion within the diffuser and delays separation, which correspondingly produces increased pressure recovery. Data for rods with axes in the y direction do not fit the indicated contours. Comparing two rod sets with relatively large values of $\sqrt{q'^2}/U_m$ and λ_x/δ^* but different rod axis orientations, a 23.6 percent increase in C_p ($2\Theta = 20$ deg) is obtained for rod set K, whereas a 10.1 percent increase is obtained for rod set GH. The curves of Fig. 8 indicate that in order to obtain increases of $C_p(2\Theta = 20$ deg) of 23.9 percent and increases of $C_p(2\Theta = 12$ deg) of 11.3 percent, minimum values of λ_x/δ^* and $\sqrt{q'^2}/U_m$ must be 7.2 and 3.5 percent respectively, and the axes of the rods and corresponding predominant axes of the eddies must be perpendicular to the flow and parallel to the diverging walls of the diffuser. For the range of parameters studied, values of C_p depend only upon $\sqrt{q'^2}/U_m$ when $\lambda_x/\delta^* \geq 8$. A study by Arnel [23] of the effect of free-stream turbulence on a boundary layer using free-stream total turbulence intensities of about 5 percent showed a decrease in the shape factor of the boundary layer which would correspondingly delay separation.

The results of this preliminary study suggest that the free-stream scale of turbulence, the total turbulence intensity, and the orientation of the axes of the eddies are important parameters, but these may not be the only parameters affecting diffuser performance (or the delay of separation for the case of external flows). In this limited study, values of the integral scale of turbulence in the y and z directions were not measured; also $\sqrt{v'^2}/\sqrt{w'^2}$ was relatively constant and $\sqrt{v'^2}/\sqrt{u'^2} \geq 1.73$ for all rod sets. It was observed that the free-stream turbulence altered the turbulence structure of the boundary layer; perhaps other means of altering the turbulence structure of the boundary layer would result in similar improvements in diffuser performance.

Conclusions

An experimental investigation of the influence of free-stream turbulence on the performance of a subsonic two-dimensional diffuser with a wall length/inlet width ratio of 14.7 has been made. The diffuser's pressure recovery coefficient at a total included divergence angle of 20 deg was increased 23.9 percent, the peak pressure recovery coefficient was increased 9.8 percent, and the total included divergence angle corresponding to the peak pressure recovery coefficient was increased approximately 1.5 degrees when values of the inlet free-stream integral scale of turbulence in the flow direction were greater than 7.2 times the inlet boundary layer displacement thickness, and when the inlet total turbulence intensity was greater than 3.5 percent; from the limited data obtained, eddy axis orientation in the direction perpendicular to the flow and parallel to the diverging walls of the diffuser apparently more effectively transmits turbulent energy to the diffuser walls. The free-stream turbulence was found to significantly affect the turbulence intensities within the boundary layer but did not significantly alter the velocity profile of the boundary layer at the diffuser's inlet. The results of the study suggest basic mechanisms that can be used to delay separation. These may be applicable for both internal and external flows for improvement of heat transfer and/or lift, drag, or pressure recovery coefficients when the turbulence is generated with low losses (e.g., near stagnation regions).

Acknowledgments

This project was sponsored by NASA-ARC Grant #NSG-2391. The author gratefully acknowledges the work of graduate students Masao Fukuda, Yu Hang Ho, and James

Downloaded From: https://fluidsengineering.asmedigitalcollection.asme.org on 12/19/2018 Terms of Use: http://www.asme.org/about-asme/terms-of-use

Ross, and of student assistants Michael Dudley, John McCrillis, Michael Reinath, and Philip Snyder.

References

1 Cockrell, D. J., and Markland, E., "A Review of Incompressible Diffuser Flow," *Aircraft Engineering,* Vol. 35, Oct. 1963, pp. 286-292.

2 McDonald, A. T., and Fox, R. W., "An Experimental Investigation of Incompressible Flow in Conical Diffusers," ASME Paper No. 65-FE-25, 1965.

3 Sovran, G., and Klomp, E. D., "Experimentally Determined Optimum Geometries for Rectilinear Diffusers with Rectangular, Conical, or Annular Cross-Section," from *Fluid Mechanics of Internal Flow,* edited by G. Sovran, Elsevier Publishing Co., Amsterdam, 1967, pp. 270-319.

4 Fox, R. W., and Kline, S. J., "Flow Regime Data and Design Methods for Curved Subsonic Diffusers," ASME, *Journal of Basic Engineering,* Vol. 84, 1962, pp. 303-312.

5 Moore, C. A., Jr., and Kline, S. J., "Some Effects of Vanes and of Turbulence on Two-Dimensional Wide Angle Subsonic Diffusers," Department of Mechanical Engineering, Stanford University, Sept. 1, 1955.

6 Waitman, B. A., Reneau, L. B., and Kline, S. J., "Effects of Inlet Conditions on Performance of Two-Dimensional Diffusers," *Journal of Basic Engineering,* Vol. 83, 1961, pp. 349-360.

7 Sajben, M., Chen, C. P., and Kroutel, J. C., "A New Passive Boundary Layer Control Device," *Journal of Aircraft,* Vol. 14, No. 7, July 1977, pp. 654-660.

8 Lachmann, G. V., *Boundary Layer and Flow Control,* Vol. 2, Pergamon Press, New York, 1961.

9 Brown, A. C., Nawrochi, H. F., and Palez, P. N., "Subsonic Diffusers Designed Integrally with Vortex Generators," *Journal of Aircraft,* Vol. 5, No. 3, May/June 1968, pp. 221-229.

10 Woodard, H. W., Benson, J. L., Stroud, J. F., and Drell, H., "Boundary Layer Forced Mixing Investigation—Literature Survey and Progress Report," Lockheed California Co., Report LR 18478, Nov. 1965.

11 Taylor, H. D., "Application of Vortex Generator Mixing Principles to Diffusers," Concluding Report, United Aircraft Corp., Research Dept., Report R-15064-5, Dec. 31, 1948.

12 Gadetskiy, V. M., Serebrizskig, Ya. M., and Fomin, V. M., "Investigation of the Influence of Vortex Generators on Turbulent Boundary Type Separation," NASA Technical Trans., NASA TT-F-16, 056, 1972.

13 Senoo, Y., and Nishi, M., "Improvement of the Performance of Conical Diffuser by Vortex Generators," ASME JOURNAL OF FLUIDS ENGINEERING, Vol. 96, Mar. 1974, pp. 4-10.

14 Hoffmann, Jon A., "Effects of Free-Stream Turbulence on Diffuser Performance," NASA-CR-163194, Jun. 1980.

15 Hinze, J. O., *Turbulence,* 2nd edition, McGraw-Hill, New York, 1975.

16 Schlichting, Hermann, *Boundary Layer Theory,* 6th edition, McGraw-Hill, New York, 1968.

17 Kline, S. J., Lisin, A. V., and Waitman, B. A., "Preliminary Experimental Investigation of Effects of Free Stream Turbulence on Turbulent Boundary Layer Growth," NASA TN D-368, Mar. 1960.

18 Kline, S. J., and McClintock, F. A., "Describing Uncertainties in Single Sample Experiments," *Mechanical Engineering,* Jan. 1953, pp. 3-8.

19 Ahmad, Q. A., Luxton, R. E., and Antonia, R. A., "Characteristics of a Turbulent Boundary Layer with an External Turbulent Uniform Shear Flow." *Journal of Fluid Mechanics,* Vol. 37, Part 2, 1976, pp. 369-396.

20 Klebanoff, P. S., "Characteristics of Turbulence in a Boundary Layer with Zero Pressure Gradient," NACA Rep. No. 1247, 1955.

21 Schubauer, G. B., "Turbulent Processes as Observed in Boundary Layer and Pipe Flow," *Journal of Applied Physics,* Vol. 25, No. 2, Feb. 1954.

22 Reneau, L. R., Johnston, J. P., and Kline, S. J., "Performance and Design of Straight, Two-Dimensional Diffusers," ASME Paper No. 66-FE-10, Apr. 1966.

23 Arnal, D., Cousteix, J., and Michel, R., "Couche Limite se Developpant Avec Gradient de Pression Positif Dans un Ecoulement Exterieur Turbulent," *Resh. Aerospatiale* (Janvier-Fevrie 1976), pp. 13-26.

Downloaded From: https://fluidsengineering.asmedigitalcollection.asme.org on 12/19/2018 Terms of Use: http://www.asme.org/about-asme/terms-of-use